Trilliant® LMX LED Work Lights
Data sheet

WORK LIGHTING

Trilliant® LMX Premium LED Work Lights: Robust, Efficient, Powerful

- Sealed lamp resists particle and water intrusion which meets IP69K
- Includes heat management and transient protection technology for enhanced LED life
- Highly efficient circuit board produces 90-95lm/W across all voltages
- LMX.5 & LMX.6 comply with CISPR 25 class 4 EMC requirements – won't interfere with radio signals
- Complies with ISO 14982 and EN 13309 for operation in agricultural and construction site machinery
- Three distinct light patterns available for any lighting need

PRODUCT SPECIFICATIONS

OPTICAL CHARACTERISTICS

		LMX.5	LMX.6	LMX.7
Illuminance	Calculated:	6160 lm	7340lm	8876lm
	Instant-on (t_0):	5390 lm	6560lm	7820lm
	Continuous (t_{30}):	5080 lm	6270lm	7260lm
Color temperature (CCT)	5700 K			
Color rendering index (CRI)	70			

ELECTRICAL CHARACTERISTICS

Operating voltage range	9-32V
Inrush current (max)	20A for 0.4ms
Operating temperature range	LMX.5: -40°C to +70°C / -40°F to +158°F LMX.6: -40°C to +55°C / -40°F to +131°F LMX.7: -40°C to +50°C / -40°F to +122°F
Reverse polarity protection	✓
Overheat protection	✓
ESD, overvoltage and transient protection	✓
Undervoltage-lockout	✓

MECHANICAL CHARACTERISTICS

Dimensions	98x157x105mm (HxWxD)
Weight	1600g
Materials	Lens: Scratch and UV resistant hard coated polycarbonate Housing: Aluminium powder-coated
Color	Black
IP Code	IP69K
Mounting	Pendant (Screw M10)
Maximum storage temperature	-55°C to +110°C
Impact and shock resistance	50G
Vibration resistance	5G (5-500Hz)

APPROVALS AND CERTIFICATES

ECE	R10
CE	✓
ISO 14982	✓
EN 13309	✓
ISO 7637-2 / ISO 16750-2	✓
ISO 10605	✓
ISO 11452	Section 2 and 4
CISPR 25	Class 4 (LMX.5, LMX.6)
ISO 16750	Section 3-5
EN 60068	✓
ISO 20653	✓

Part number	Light Pattern	Connector	Amps	Watts	Effective Lumens
63Z61	CLOSE/LONG HYBRID	Deutsch DT	4.0A (14V); 2.0A (28V)	55W	5000
63Z71	CLOSE RANGE	Deutsch DT	4.0A (14V); 2.0A (28V)	55W	5000
63Z81	LONG RANGE	Deutsch DT	4.0A (14V); 2.0A (28V)	55W	5000
63Z31	CLOSE/LONG HYBRID	Deutsch DT	4.6A (14V); 2.4A (28V)	66W	6000
63Z41	CLOSE RANGE	Deutsch DT	4.6A (14V); 2.4A (28V)	66W	6000
63Z51	LONG RANGE	Deutsch DT	4.6A (14V); 2.4A (28V)	66W	6000
63Z01	CLOSE/LONG HYBRID	Deutsch DT	5.7A (14V); 2.7A (28V)	80W	7000
63Z11	CLOSE RANGE	Deutsch DT	5.7A (14V); 2.7A (28V)	80W	7000
63Z21	LONG RANGE	Deutsch DT	5.7A (14V); 2.7A (28V)	80W	7000

2600 Lanier Drive, Madison, Indiana U.S.A. 47250-0550

U.S. **800.628.0809** Canada **800.268.5612**

Europe **+49 9422 40331-0** Mexico **+(52) 818262 4412** China **+86.21.5774.9633**

grote.com

GLB-2020-015

Trilliant® LMX LED Work Lights

Data sheet

WORK LIGHTING

Close / Long Hybrid - IsoLux (63Z61)

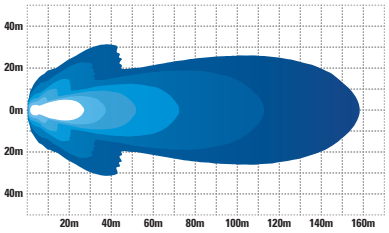

Close Range - IsoLux (63Z71)

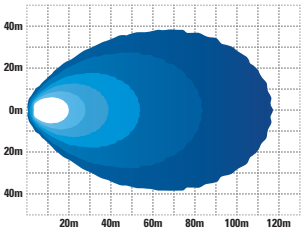

Long Range - IsoLux (63Z81)

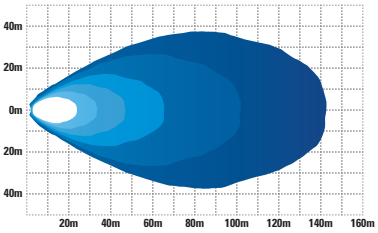

Close / Long Hybrid - IsoLux (63Z31)

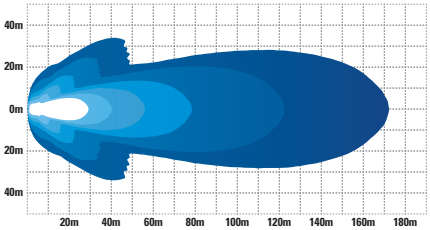

Close Range - IsoLux (63Z41)

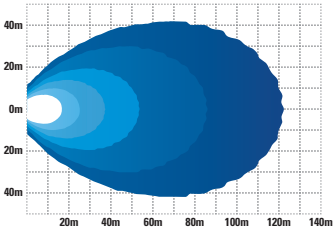

Long Range - IsoLux (63Z51)

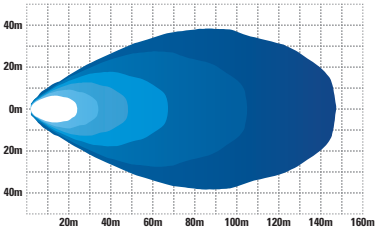

Close / Long Hybrid - IsoLux (63Z01)

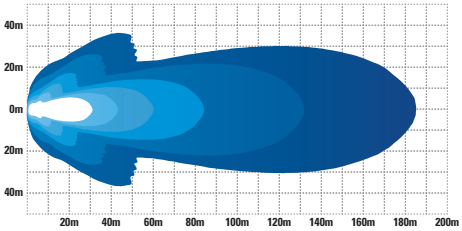

Close Range - IsoLux (63Z11)

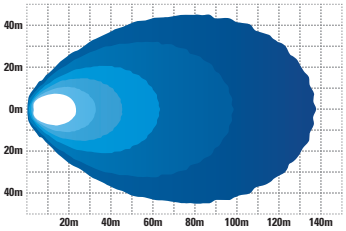

Long Range - IsoLux (63Z21)

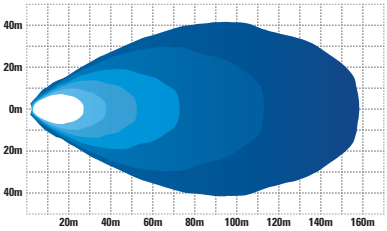

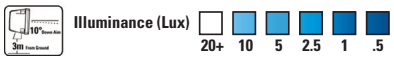

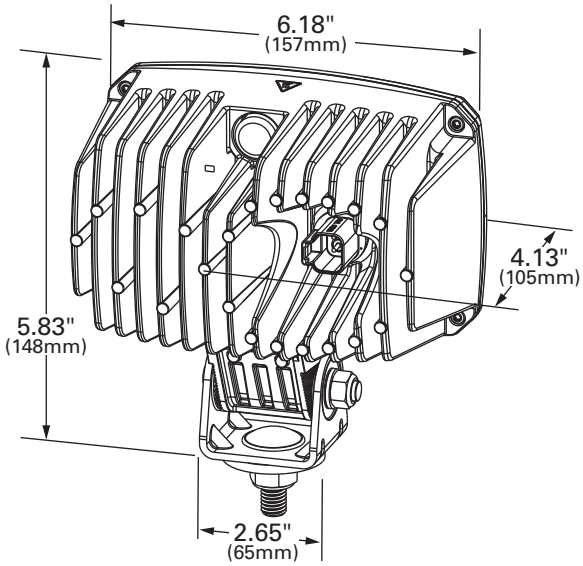

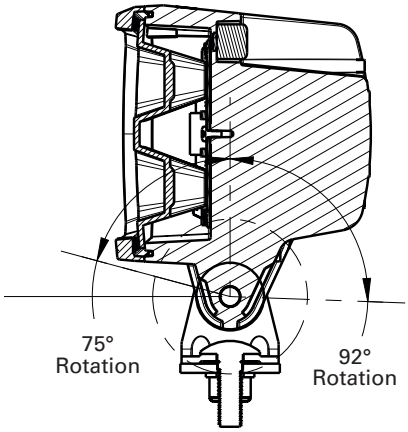

2600 Lanier Drive, Madison, Indiana U.S.A. 47250-0550

U.S. **800.628.0809** Canada **800.268.5612**

Europe **+49 9422 40331-0** Mexico **+(52) 818262 4412** China **+86.21.5774.9633**

grote.com

GLB-2020-015